1. The transfer and output dc current-voltage characteristics of one top-gated graphene field-effect transistor (GFET) are shown in Fig. 1. The channel width (W) is 10 µm, the gate length (L) is 1 µm, the top-gate oxide thickness (t_{ox}) is 5 nm, the dielectric constant of the top-gate oxide ($\varepsilon_{r,ox}$) is 6.9, the vacuum permittivity (ε_0) is 8.85×10^{-12} F/m, and the electron charge (e) is 1.6×10^{-19} C.

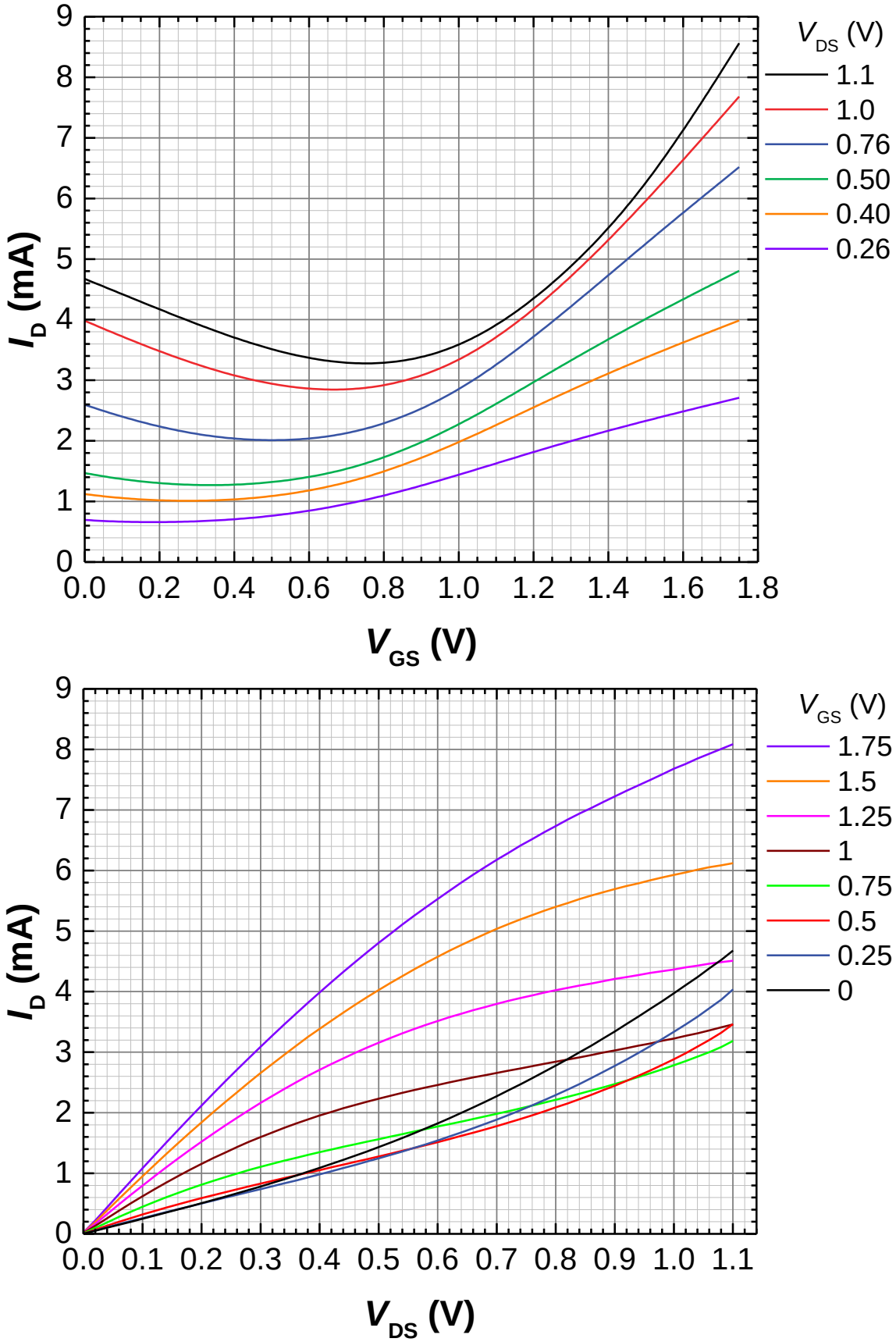

Figure 1 The dc current-voltage characteristics of a GFET. (top) Transfer characteristics. (bottom) Output characteristics.

(a) Which set of curves (transfer or output?) is more suitable for determining the Dirac voltage (V_{th}) of an unbiased GFET (briefly explain why)? Calculate V_{th} as the arithmetic mean of the V_{th} values calculated from the top three curves in this set.

(b) Find the concentration of the ambient doping in this GFET. Neglect quantum capacitance and thermal and puddle charges. Comment on the type of doping.

(c) Plot the static voltage transfer characteristic $V_{OUT} = f(V_{IN})$ of the amplifier shown in Figure 2 for $0\ \text{V} \leq V_{IN} \leq 1.75\ \text{V}$, where V_{IN} and V_{OUT} are the dc components of the input and output voltage, respectively. Assume that the load (R_L) is 206 Ω. Calculate the low-frequency voltage gain (A_v) from the static voltage transfer characteristic at $V_{IN} = 1.5$ V. Note: calculate the derivative as the arithmetic mean of the left and right derivatives.

(d) Linearize a GFET and define the transconductance (g_m) and output conductance (g_d) of a GFET. Plot the equivalent model of a GFET valid in the ac small-signal regime at low frequencies.

(e) Derive the expressions for the dc current-voltage characteristics $I_D(V_{GS}, V_{DS})$ and transconductance g_m of a GFET in the linear approximation.

Find the dc operating points and numerical values of the intrinsic transistor gain $A = g_m/g_d$ of the GFET in the amplifier shown in Fig. 2 in the following two cases:

(f) $R_L = 0$ Ω,
(g) $R_L = 206$ Ω,

Use a ruler to find the derivatives (as tangents on the curves). In which case the higher intrinsic gain A is obtained and briefly explain why (i.e., comment on the location of the operating points on the transfer and output characteristics)?

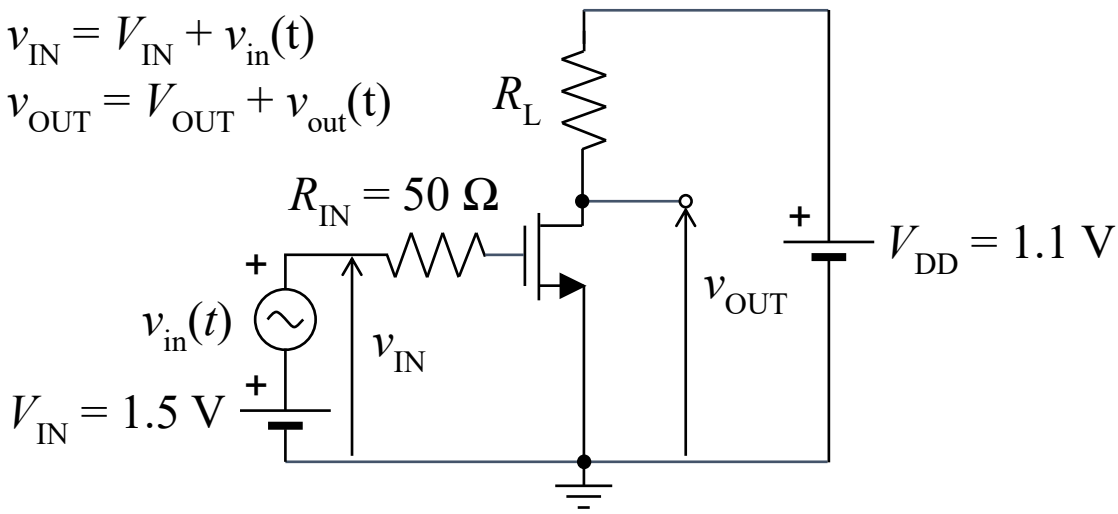

Figure 2 GFET in the common-source amplifier.

(h) Find the low-frequency voltage gain $A_v = v_{out}/v_{in}$ using the equivalent scheme in (d) and R_L in (g). Compare the obtained result to the result obtained in (c). Here, v_{in} and v_{out} are the ac components of the input and output voltage, respectively.

(i) Find a new value of V_{DD} in the circuit in Fig. 2 such that the operating point for $R_L = 206$ Ω is identical to that found in (f). How much is $A_v = v_{out}/v_{in}$ now?

(j) Plot the extrinsic ac small-signal circuit model of a GFET at high frequencies. Briefly explain the origin of all components in the model.

(k) Express the intrinsic current gain (h_{21}) of a GFET via y parameters and derive its expression in case of an intrinsic GFET. The y parameters of an intrinsic GFET are: $y_{11} = j\omega(C_{gs}+C_{gd})$, $y_{12} = -j\omega C_{gd}$, $y_{21} = g_m - j\omega C_{gd}$, and $y_{22} = g_d + j\omega C_{gd}$, where $j = \sqrt{(-1)}$ and ω is the angular frequency. Find the expression for the intrinsic cut-off frequency (f_T) and calculate its numerical value in the operating point (f).

(l) Find numerical values of the electric-field mobility (μ) and charge carrier velocity (v) based on the numerical value of the transconductance calculated in the operating point (f) and the expression for g_m derived in (e). Assume that the velocity is smaller than the saturation velocity (v_s). Explain the importance of intrinsic f_T.

(m) Does intrinsic f_T depend on g_d and why? What is the consequence of this?

(n) Does extrinsic f_T depend on the gate resistance (R_G) and why? What is the consequence of this?

(o) The unilateral power gain (G') of a GFET is

$$G' \approx \frac{g_m^2}{4\omega^2 R_G C_G^2 g_d}$$

where the gate resistance (R_G) is 20 Ω and C_G is the geometrical gate capacitance. Find the expression for the maximum frequency of oscillation (f_{max}), express it via f_T obtained in (k), and calculate its numerical value in the same case. Explain the importance of f_{max} in high-frequency electronics. What phenomena f_{max} takes into account in contrast to f_T?

2. Consider the crystal lattice of graphene.

(a) Draw the lattice and express the unit cell vectors $\mathbf{a}_1$ and $\mathbf{a}_2$ as a function of the C-C distance a.

(b) Find the reciprocal vectors $\mathbf{b}_1$ and $\mathbf{b}_2$.

(c) Draw the first Brillouin zone of graphene based on $\mathbf{b}_1$ and $\mathbf{b}_2$. Mark the Dirac points and find the coordinates of two nonequivalent Dirac points.

(d) Consider the chiral vector $\mathbf{C}_h = n\mathbf{a}_1 + m\mathbf{a}_2$ of carbon nanotubes (CNTs). Derive the expression which must be satisfied by n and m so that a CNT is metallic.

3. Explain schematically how a resolution enhancement is achieved by using an attenuated phase-shift mask in optical lithography.

1.

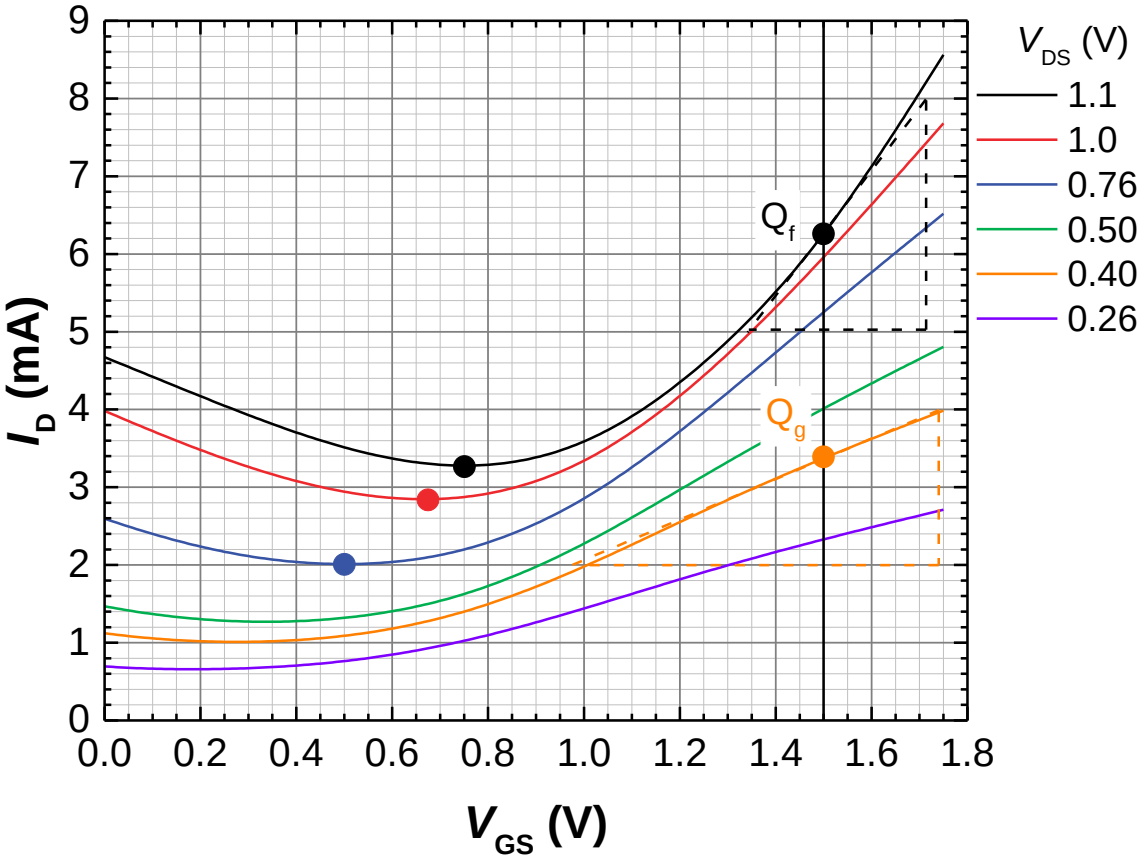

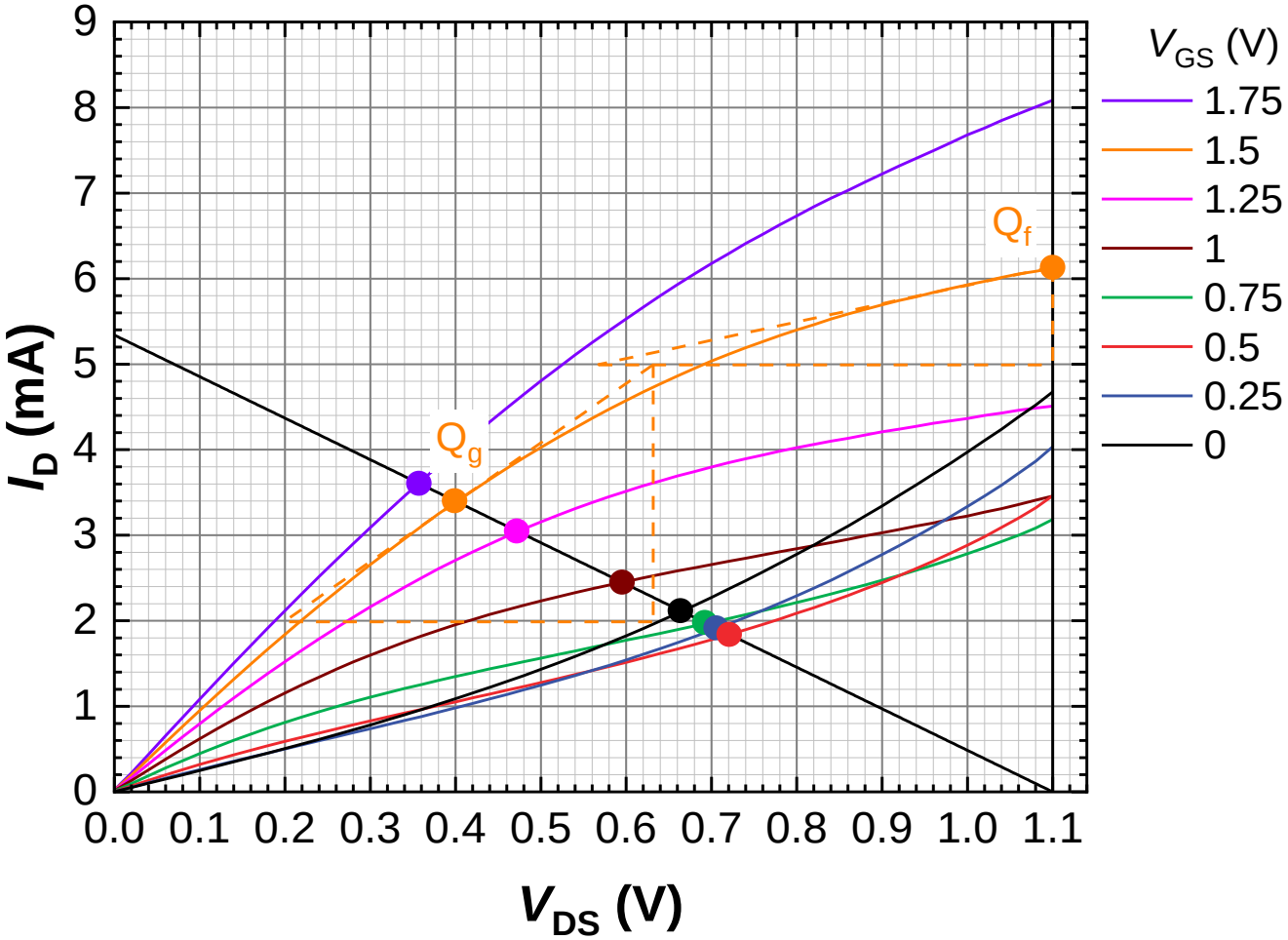

(a) Slides 10, 16. The transfer curves are more suitable because the minimum of each curve, which is at $V_{GS} = V_{th} + V_{DS}/2$, is very easy to locate. The output curves can also be used but the onset of quasi-saturation, which is at $V_{DS} = V_{GS} - V_{th}$, is much harder to locate.

V_{DS} (V)	V_{GS} (V) at the Dirac point	$V_{th} = V_{GS} - V_{DS}/2$
1.1	0.75	0.2
1	0.675	0.175
0.76	0.50	0.12

From this we get V_{th} = (0.2 V + 0.17 V + 0.12 V) / 3 ≈ 0.16 V

(b) Slide 13. The total charge in the channel is $Q = Q_{imp} - C_G V_{GS}$ which equals 0 at $V_{GS} = V_{th}$. Hence

$$Q_{imp} = C_G V_{th}$$

$$epWL = \varepsilon_{ox} \frac{WL}{t_{ox}} V_{th}$$

$$p = \frac{\varepsilon_{r,ox}\varepsilon_0}{t_{ox}} \frac{V_{th}}{e}$$

$$p = 1.2 \times 10^{12}\ \text{cm}^{-2} > 0$$

The ambient doping is p-type, as expected in GFETs on SiO_2 substrates.

(c) Slide 21. The static voltage transfer characteristic is obtained by finding $V_{DS} = V_{OUT}$ at the intersections between the load line $I_D = (V_{DD} - V_{DS})/R_L$ and the output characteristics (each corresponding to a fixed $V_{GS} = V_{IN}$, see the output characteristics on page 1).

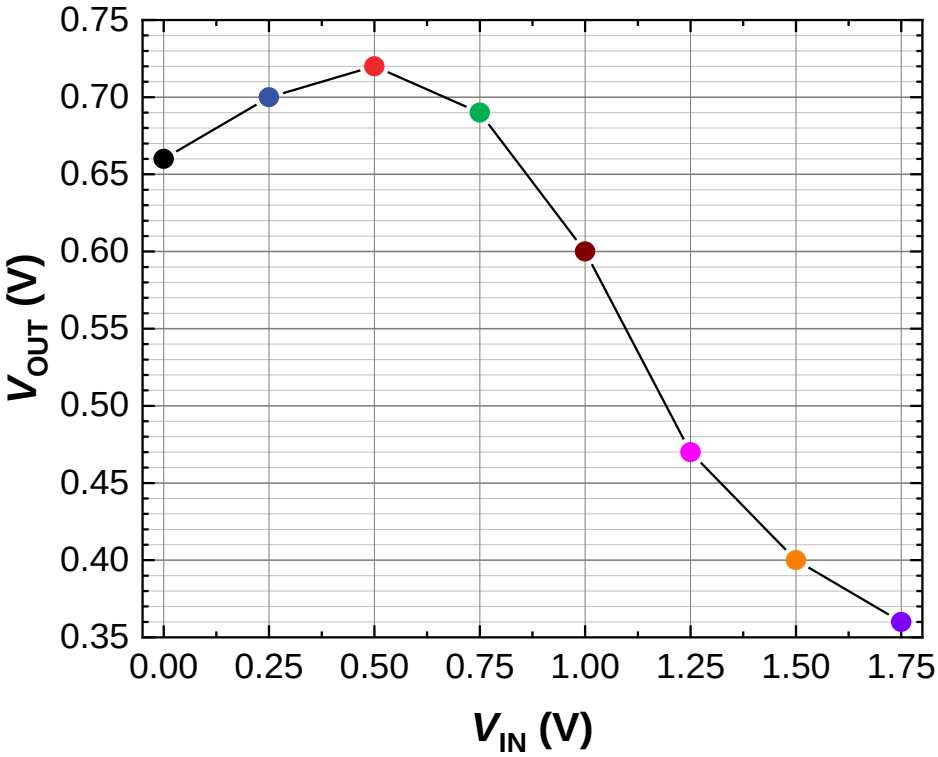

The voltage gain is A_v = [(0.40–0.47)/0.25 + (0.36-0.40)/0.25]/2 = –0.22 at V_{IN} = 1.5 V. The highest gain is around V_{IN} = 1.125 V (A_v = (0.47–0.60)/0.25 = -0.52).

(d) Slide 29. At low frequencies:

$$i_G = 0$$

$$i_D = i_D(v_{GS}, v_{DS}) = i_D\big|_Q + \left.\frac{\partial i_D}{\partial v_{GS}}\right|_Q (v_{GS} - V_{GS}) + \left.\frac{\partial i_D}{\partial v_{DS}}\right|_Q (v_{DS} - V_{DS}) + \ldots$$

$$i_D - I_D = i_d = g_m v_{gs} + g_d v_{ds} = g_m v_{gs} + \frac{v_{ds}}{r_d}$$

$$g_m = \left.\frac{\partial i_D}{\partial v_{GS}}\right|_Q \qquad g_d = \left.\frac{\partial i_D}{\partial v_{DS}}\right|_Q$$

Q = dc operating point

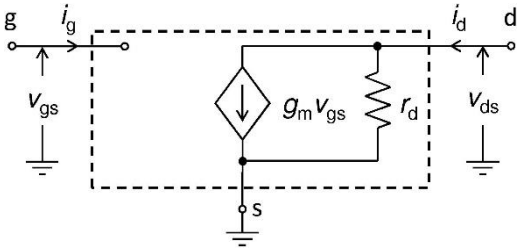

(e) Slide 32. In the linear approximation:

$$Q_{ch} = Q_p - Q_G = C_G V_{th} - C_G V_{GS} = C_G (V_{th} - V_{GS})$$

$$n_{ch} = \frac{|Q_{ch}|}{eA} = \frac{C_{ox} WL |V_{GS} - V_{th}|}{eWL} = \frac{\varepsilon_{ox}}{t_{ox}} \frac{|V_{GS} - V_{th}|}{e} \Rightarrow \sigma_{ch} = n_{ch} e\mu = \frac{\varepsilon_{ox}\mu}{t_{ox}} |V_{GS} - V_{th}|$$

$$G = \frac{W}{L}(\sigma_{th} + \sigma_{ch}) = G_{th} + \frac{W}{L}\frac{\varepsilon_{ox}\mu}{t_{ox}} |V_{GS} - V_{th}| \Rightarrow I_D = G V_{DS} = \left(G_{th} + \frac{W}{L}\frac{\varepsilon_{ox}\mu}{t_{ox}} |V_{GS} - V_{th}| \right) V_{DS}$$

$$g_m = \left.\frac{dI_D}{dV_{GS}}\right|_{V_{DS}=\text{const}} = \pm \frac{W}{L}\frac{\varepsilon_{ox}\mu}{t_{ox}} V_{DS}$$

(f) Slide 69.

$V_{DS} = V_{DD} = 1.1$ V → Q_f(1.1 V, 6.2 mA) is at the output curve for $V_{GS} = 1.5$ V

$V_{GS} = V_{IN} = 1.5$ V → Q_f(1.5 V, 6.2 mA) is at the transfer curve for $V_{DS} = 1.1$ V

$$g_m = \frac{(8-5)\,\text{mA}}{(1.7-1.35)\,\text{V}} = 8.6\ \text{mS} \qquad g_d = \frac{(6.1-5)\,\text{mA}}{(1.1-0.56)\,\text{V}} = 2\ \text{mS}$$

$$A = \frac{g_m}{g_d} = 4.3 > 1$$

(g) Slide 69.

$I_D = (V_{DD} - V_{DS})/R_L$ → Q_g(0.4 V, 3.4 mA) is at the output curve for $V_{GS} = 1.5$ V (at the intersection between the load line and the output curve for $V_{GS} = 1.5$ V).

$V_{GS} = V_{IN} = 1.5$ V → Q_g(1.5 V, 3.4 mA) is at the transfer curve for $V_{DS} = 0.4$ V

$$g_m = \frac{(4-2)\,\text{mA}}{(1.75-1)\,\text{V}} = 2.7\ \text{mS} \qquad g_d = \frac{(5-2)\,\text{mA}}{(0.64-0.2)\,\text{V}} = 6.8\ \text{mS}$$

$$A = \frac{g_m}{g_d} = 0.4 < 1$$

Case (f) is much better because g_m is larger (the operating point is on the transfer curve corresponding to larger V_{DS}, i.e., I_D) and g_d is smaller (the operating point is in the quasi saturation, i.e., not in the ohmic regime as in case (g)).

(h) Slide 30

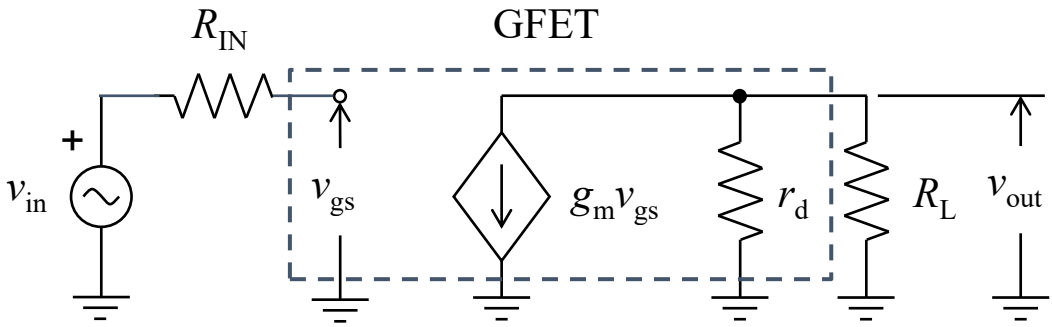

$$A_v = \frac{v_{out}}{v_{in}} = -g_m(r_d \parallel R_L) = -\frac{R_L}{R_L + r_d} A = -\frac{206}{206+147} 0.4 = -0.23$$

$$r_d = \frac{1}{g_d} = 147\ \Omega$$

Almost identical voltage gain is obtained, which was expected at low frequencies.

(i) $V_{DD} = V_{DS} + R_L I_D = 1.1\ \text{V} + 206\ \Omega \times 6.2\ \text{mA} = 2.38\ \text{V}$

The transconductance g_m and output conductance g_d have the same value as in (f).

$$A_v = -\frac{R_L}{R_L + r_d} A = -\frac{206}{206+500} 4.3 = -1.25$$

$$r_d = \frac{1}{g_d} = 500\ \Omega$$

(j) Slide 36. The extrinsic high-frequency model is shown below.

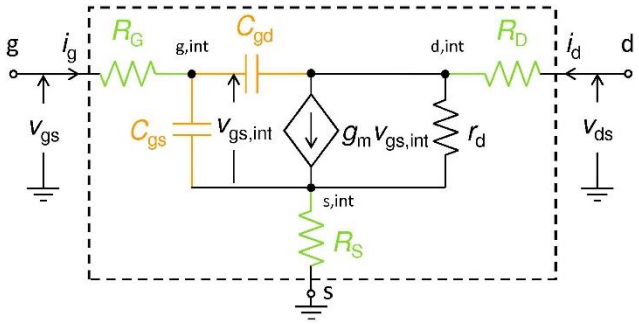

R_G = series resistance of the gate electrode
R_S = series resistance of the source electrode + graphene/source contact resistance
R_D = series resistance of the drain electrode + graphene/drain contact resistance
C_{gs} = capacitance of the gate-source capacitor
C_{gd} = capacitance of the gate-drain capacitor
In the first approximation: $C_{gs} + C_{gd} = C_G$ = geometrical gate capacitance (neglecting the quantum capacitance).

(k) Slides 39, 43

$I_1 = y_{11} V_1 + y_{12} V_2$

$I_2 = y_{21} V_1 + y_{22} V_2$

$$h_{21} = \left.\frac{I_2}{I_1}\right|_{V_2=0} = \frac{y_{21}V_1}{y_{11}V_1} = \frac{y_{21}}{y_{11}} = \frac{g_m - j\omega C_{gd}}{j\omega(C_{gs}+C_{gd})} \approx \frac{g_m}{j\omega C_G}$$

$$|h_{21}(f)| \approx \frac{|g_m|}{\omega C_G}$$

$$|h_{21}(f_T)| = 1 = \frac{|g_m|}{2\pi f_T C_G} \Rightarrow f_T = \frac{1}{2\pi}\frac{g_m}{C_G} = \frac{1}{2\pi}\frac{8.6\text{ mS}}{122\text{ fF}} = 11\text{ GHz}$$

$$C_G = \varepsilon_{ox}\frac{WL}{t_{ox}} = 6.9\times 8.85\times 10^{-12}\frac{10^{-5}\times 10^{-6}}{5\times 10^{-9}}\text{F} = 122\text{ fF}$$

(l) Slide 32. The operating point is in the $g_m > 0$ part of the transfer curve, hence:

$$g_m = \frac{W}{L}\frac{\varepsilon_{ox}\mu}{t_{ox}}V_{DS} = \frac{C_G}{L^2}\mu V_{DS} \Rightarrow \mu = \frac{L^2}{C_G}\frac{g_m}{V_{DS}} = \frac{10^{-12}}{122\times 10^{-15}}\frac{8.6\times 10^{-3}}{1.1}\text{ m}^2/(\text{Vs}) = 640\text{ cm}^2/(\text{Vs})$$

$$v = \mu E = \mu\frac{V_{DS}}{L} = 640\text{ cm}^2/(\text{Vs})\frac{1.1\text{ V}}{1\,\mu\text{m}} = 7\times 10^6\text{ cm/s}$$

Slide 45. The importance of f_T can be understood from:

$$f_T = \frac{1}{2\pi}\frac{g_m}{C_G} = \frac{1}{2\pi}\frac{\mu}{L}\frac{V_{DS}}{L} = \frac{1}{2\pi}\frac{\mu E_{DS}}{L} = \frac{1}{2\pi}\frac{v}{L} = \frac{1}{2\pi}\frac{1}{\tau_T}$$

The cutoff frequency f_T is a measure of the intrinsic transistor speed because it is inversely proportional to the charge carrier transit time (e.g., the time carriers need to go from source to drain).

(m) Slide 45. The intrinsic f_T does not depend on g_d because intrinsic h_{21} does not depend on g_d. The latter is because g_d is short circuited by the definition of h_{21} ($V_2 = 0$) in case of the intrinsic GFET. This means that the intrinsic f_T does not depend on the quality of the transistor saturation, i.e., the intrinsic f_T does not provide any information about the transistor saturation.

(n) Slide 46. The extrinsic f_T does not depend on R_G because extrinsic h_{21} does not depend on R_G. The latter is because of the definition of h_{21}, i.e., because the input current I_1 (which flows through R_G) does not depend on R_G. This means that the extrinsic f_T does not provide any information about the speed at which the gate capacitance is charged/discharged through R_G, which is the main speed limiting factor of GFETs at high frequencies.

(o) Slide 58

$$G'(f) \approx \frac{g_m^2}{4\omega^2 R_G C_G^2 g_d} = \frac{\omega_T^2}{\omega^2}\frac{1}{4R_G g_d} = \frac{f_T^2}{f^2}\frac{1}{4R_G g_d}$$

$$G'(f_{max}) \approx \frac{f_T^2}{f_{max}^2}\frac{1}{4R_G g_d} = 1 \Rightarrow f_{max} = \frac{f_T}{2\sqrt{R_G g_d}} = \frac{11\text{ GHz}}{2\sqrt{20\,\Omega\times 2\text{ mS}}} = 28\text{ GHz}$$

The maximum frequency of oscillation is the highest frequency at which a transistor can be considered as an active device. For $f > f_{max}$ the transistor becomes a passive device (unable to amplify active ac power). Since f_{max} critically depends on g_d and R_G, it is the transistor speed metrics which also provides information about the transistor saturation and speed at which the gate capacitance is charged/discharged through R_G.